TEMPO MATÉRIAUX

www.tempolistel.com www.myaccesspanels.co.uk

# TECHNICAL DATA SHEET

## TEMPOLISTEL A137
*Flat LED profile*

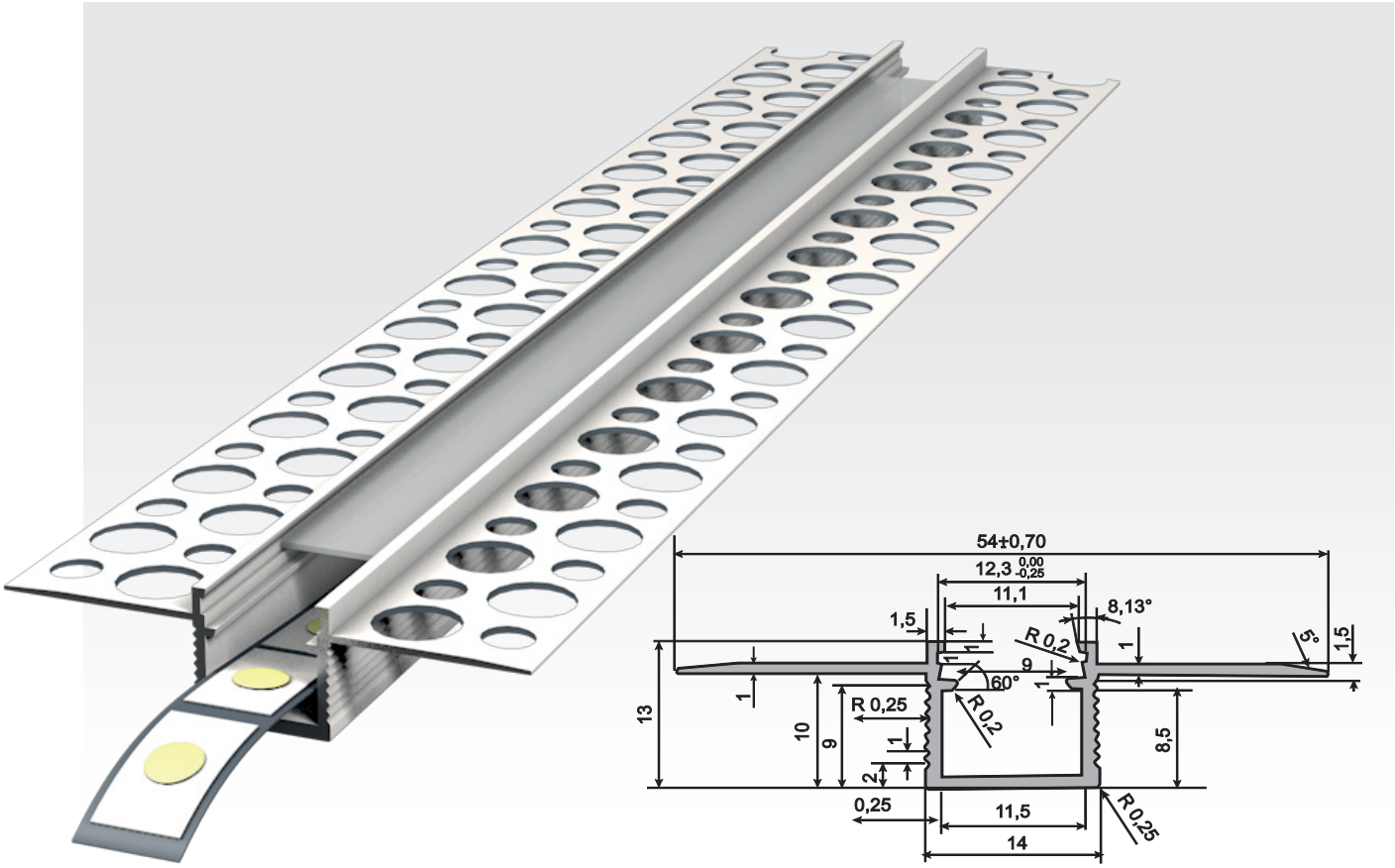


## APPLICATION

LED profile for mounting on plasterboard. Supplied with opaque diffuser. Can be installed on false ceilings and partitions.

**Ref.: 400A137**

## DESCRIPTION

**Frame type:**
Decorative profile

**Use:**
Plasterboard structures

**Cladding colour:**
RAL 9016 white

**Length:**
2500 mm

## TECHNICAL DATA

**Type of finish:**
Painted

RAL colours available


**TEMPO MATERIAUX Eurl**
24 Rue Benjamin Silliman Junior
67550 Vendenheim,
France
**Tel :** +33 (0)3 88 26 15 71
**info@tempolistel.fr**

**TEMPO MATÉRIAUX SRL**
Boulevard Saint-Michel 65/6
1040 Etterbeek,
Belgium
**Tel :** +32 (0)2 430 25 84
**info@tempolistel.be**

**TEMPO BAUSTOFFE GMBH**
Tullastr. 1
68161 Mannheim,
Germany
**Tel :** +49 (0)173 57 66 793
**info@tempolistel.de**

**TEMPO MATERIALEN B.V.**
Rietbaan 2
2908 LP Capelle aan
den IJssel, Netherlands
**Tel :** +31 (0)10 322 04 62
**info@tempolistel.nl**